SONY

VENICE 2

VENICE 2

with **8K** image sensor

VENICE 2

with **6K** image sensor

VENICE

Emotion in Every Frame

The history of digital motion picture camera technology started in 1999, when Sony released the first 24p digital motion picture production system. In 2006, we unveiled the world's first 4K digital cinema projection system, influencing and increasing demand for high-quality digital content in 4K. Then we introduced the F65, F55 and F5 motion picture camera systems, which have been used on many productions and supported by many users from the cinema industry worldwide.

Then, in 2017, Sony introduced a next-generation motion picture camera system, focused on large format production: the VENICE. Working with extensive and detailed input from the film industry, we designed VENICE to give cinematographers more creative freedom. A 6K image sensor offered incredible detail and colors. Dual-base ISO drove remarkable low-light performance. An 8-step internal ND filter mechanism saved precious time on set.

Now, VENICE 2 builds on this success, with new capabilities in a familiar, compact body.

At Sony, our mission remains the same: to satisfy the ever-increasing demands of creative minds. We are committed to further elevating image quality and improving the visual experience so that filmmaker and audience can feel emotion in every frame.

This is why the CineAlta logo symbolizes 'infinity'. We believe in the unlimited creative possibility and the endless pursuit of perfecting technology

CineAlta

Trusted Creative Partner

VENICE 2 is a cinema camera created by and for the cinematographer. The camera comes with one of two full-frame image sensors, each offering exceptional picture quality. Thanks to new internal recording capabilities, users can capture even more colors and detail within the compact body they already know.

Remarkable Images

VENICE 2 offers a choice between 8K and 6K sensors, both of which boast incredibly wide latitude and gamut. Filmmakers have greater freedom of expression in grading than ever before, with either 16 or 15+ stops of latitude and exquisite color rendition.

Simple and Intuitive

Operators need to know their camera is reliable and usable, especially during demanding shoots. VENICE 2 features simple menu navigation and connectors arranged to make life easier on set. With a durable, compact build, the camera is fast to set up for handheld or mounted shooting, so you can focus on filming, not the camera.

Behind the scenes of the demo reel shot by Rob Hardy

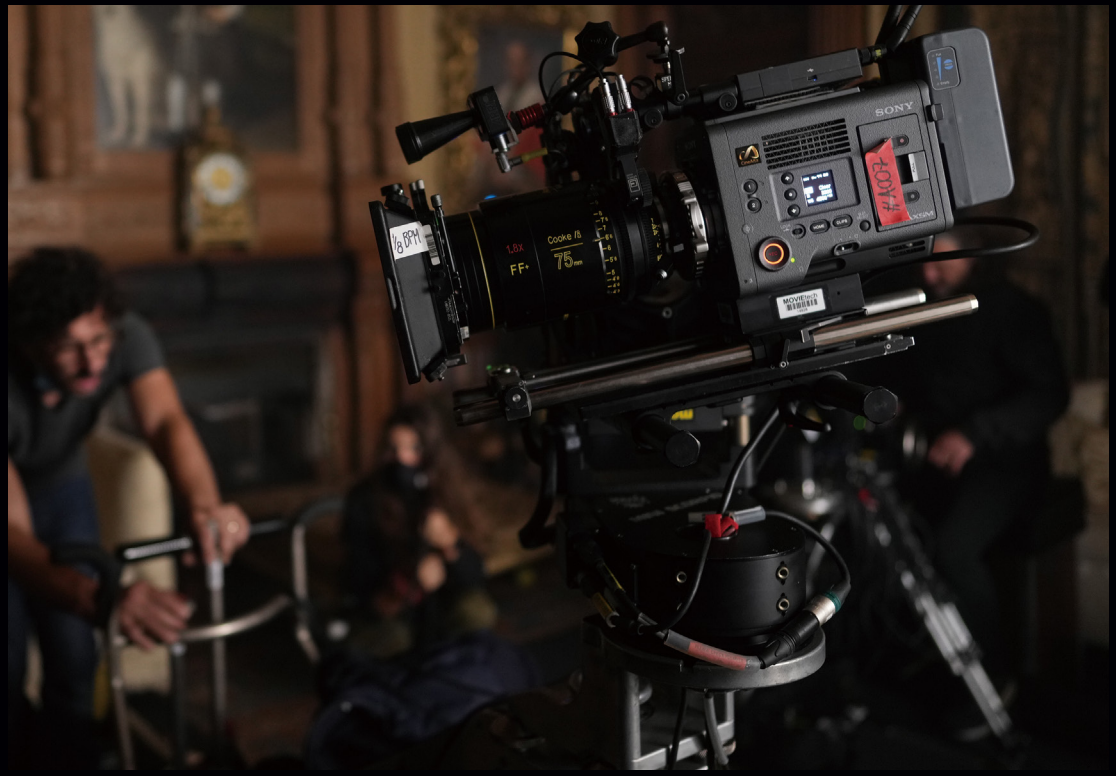

Rob Hardy BSC, ASC

Director of Photography

I'm used to using the VENICE and I would say I'm pretty much an advocate of that camera. The opportunity to use VENICE 2 is actually a really fantastic one because it's a real test. I mean, that's essentially what this is. We've designed it so that we're effectively testing this camera for the very first time in a sort of real kind of filmmaking scenario set up.

In that sense, what we're doing is putting it through its paces on a set using actors with a piece of drama with all of the issues and problems that may come with that.

In other words, time pressures having to move quite quickly in terms of lighting those things. I really wanted to see how the camera would perform in that context because that's essentially how I would use it.

This is the first time I've ever used that large senser of the 8.6K and we were lucky enough to get some anamorphic lenses that will really utilize that whole sensor. As a result, it was quite astonishing.

Obviously, the ISO have been bumped up in both instances. It does enables me to shoot at high speed if it needs to be in a low light level. Which is something that wasn't really an option before. So for me, it was the big gain.

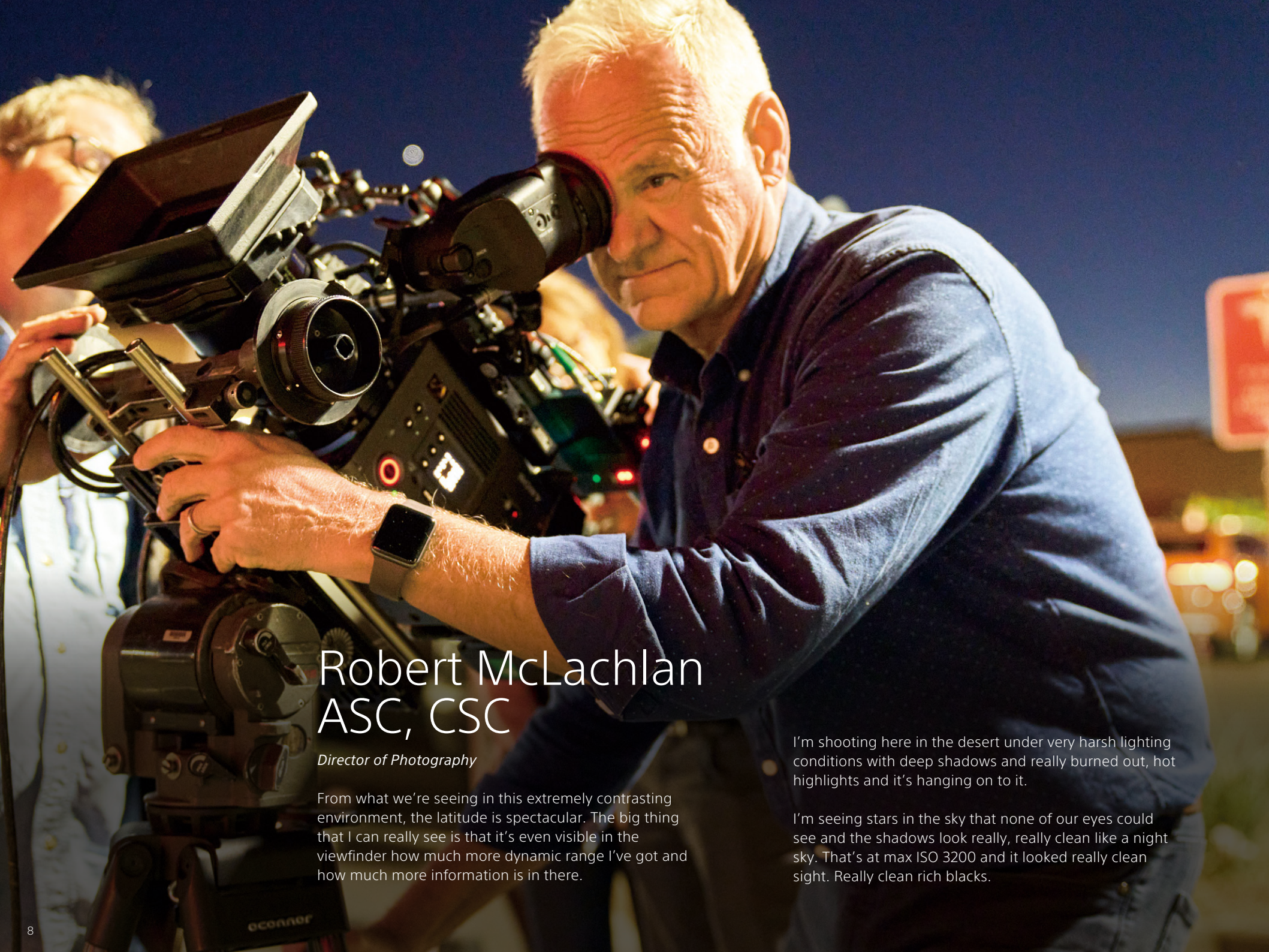

Robert McLachlan ASC, CSC

Director of Photography

From what we're seeing in this extremely contrasting environment, the latitude is spectacular. The big thing that I can really see is that it's even visible in the viewfinder how much more dynamic range I've got and how much more information is in there.

I'm shooting here in the desert under very harsh lighting conditions with deep shadows and really burned out, hot highlights and it's hanging on to it.

I'm seeing stars in the sky that none of our eyes could see and the shadows look really, really clean like a night sky. That's at max ISO 3200 and it looked really clean sight. Really clean rich blacks.

When the first rushes came in, the contrast ratio on a lot of the shots was massive in 709 or SDR environments.

There are the highlights, there are the shadows and then you start grading the material, everything came back.

Adam Shell
Digital Imaging Technician

In comparison to the VENICE, it's much nicer and it feels much easier to set up.

We use the Cooke Anamorphic, which are the heaviest lens you can get at the moment that will cover an 8.6K sensor and it makes it feasible.

Peter Wignall
Steadicam Operator

I was expecting to be changing in between each flight but no. We've done two flights and I've still got 50 percent left on the batteries. And that's been powering the gimbal, the camera, a video link and the lens control as well as everything else.

The VENICE 2 just makes flying it on a drone possible. It's going to last for ages in the air. It's got eight ND's built into it, which is astonishing.

Chris Williams
Drone Camera Technician

Having X-OCN recording internally and being powered by the camera CPU is great. It just comes with a lot more problems having onboard recorder that could come disconnected.

The color, especially on skin tone, just roll off and look just beautiful. I feel really film like, definitely like oil painting.

Tim Nagasawa
Digital Imaging Technician

36x24mm Full-Frame Sensor for Cinema

VENICE 2 features one of two 36x24mm full-frame image sensors, designed specifically for the demands and performance of high-end cinematography. Each offers remarkable sensitivity, latitude and color rendition, and because the sensor blocks are interchangeable, users can easily switch between sensors—without any extra firmware—and can even use the sensor from their original VENICE. The new 8K sensor can capture images up to a maximum resolution of 8640 x 5760, while the established 6K sensor offers up to 6048 x 4032. Both offer powerful oversampling for incredible 4K images.

Creative Freedom

Full-Frame full width 36 mm 8K and 6K

In full-frame, you can use the full width of the sensors (8640 or 6048 pixels) for widescreen spherical 2.39:1 or Large Format Scope. Full-Frame can be used creatively in several ways – for example, to allow for extra shallow depth of field or super-wide shooting.

Super35 full height 2.0x squeeze Anamorphic

For anamorphic shooting and production, Super35 full height 2x squeeze anamorphic is supported.

Super35 17:9 and 16:9

These popular imager sizes have native support in VENICE 2, and the 8K sensor makes it possible to capture 5.8K footage in these modes. Current Super35mm PL mount lenses can be used as well.

Surround View (Look Around)

Using the 6K sensor, the camera records only the active area but the viewfinder and on-set monitors can display a 5% margin around it. Surround View supports three imager modes: 3.8K 16:9, 4K 17:9 and 4K 4:3.

Phenomenal Latitude

VENICE 2's 8K sensor has an exceptional 16 stops of latitude, while the 6K sensor boasts 15+ stops of latitude. This means that both imagers can deliver phenomenal images with very little noise, in conditions that range from searing sunlight to almost no light. VENICE 2 also excels at High Dynamic Range imaging, allowing for unprecedented creative freedom in grading.

Dual Base ISO

VENICE 2 features dual base ISO, meaning that the 8K sensor offers Base ISO3200 in addition to Base ISO800, while the 6K sensor has Base ISO500 and Base ISO2500. 8K sensor excels in low-light, High Dynamic Range capture, with an exposure latitude from 6 stops over to 10 stops under 18% Middle Gray, for a total of 16 stops. 6K sensor offers an exposure latitude from 6 stops over to 9 stops under 18% Middle Gray, for a total of 15+ stops.

More Colors for More Expression

VENICE 2 can exceed the BT.2020 color space, with a color range wider than DCI-P3. This means it can beautifully reproduce the true color of the scene in front of your lens. The camera also provides a broad palette in the grading suite, using the established workflow of Sony's S-Log3 and Ultra-wide Color space, S-Gamut3. Plus, VENICE 2's 8K and 6K sensors match colors almost perfectly, making your grading experience even better.

High Frame Rate

VENICE 2 can shoot at speeds of up to 120fps at 4K and 90fps at 6K, when using the 6K sensor. In combination with an anamorphic license, it also allows shooting at speeds of up to 75fps at 4K 4:3 and 72fps at 4K 6:5. With the 8K sensor, VENICE 2 can achieve up to 60fps at 8.2K and 90fps at 5.8K.

Fast Shutter

Jello effect is something we don't need when filming. VENICE 2 has high speed readout sensors that minimize the jello effects typical with CMOS sensors.

PL Lens Mount

VENICE 2 comes with the industry-standard PL lens mount, and is compatible with all Super35 and full-frame PL lenses—spherical and anamorphic. The lens mount includes contacts that support Cooke/i Technology, and lens information is recorded as metadata, frame by frame. We have also added support for ZEISS eXtended Data.

Lever Lock Type E-mount

E-mount offers unsurpassed compatibility with Sony lenses. E-mount (lever lock type) gives users the ability to change lenses by rotating the locking collar rather than the lens itself, which means that in most cases lens support rigs don't need to be removed, saves time during a production.

Sensor interchangeable between other models

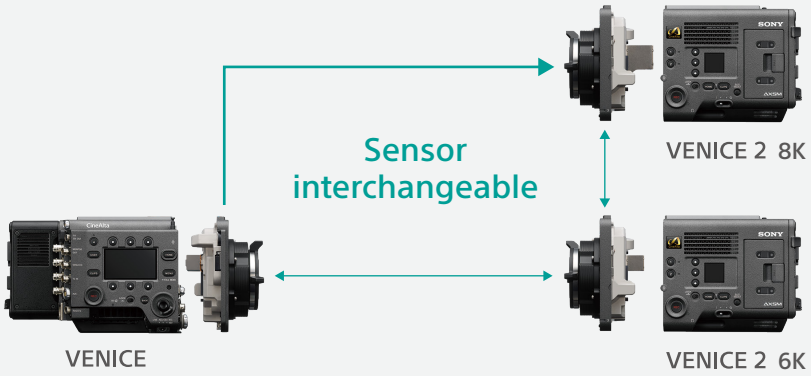

Imager modes

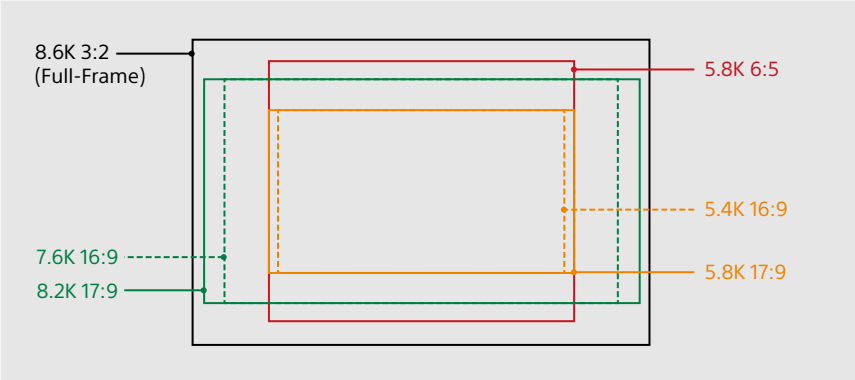

Imager mode details for 8.6K image sensor in V1.0

Software License	Imager mode	Resolution	W x H (mm)	Project Frame Rate	Select FPS**
License not Required*	5.4K 16:9	5434 x 3056	22.6 x 12.7	23, 24, 25, 29, 50, 59	1-60, 66, 72, 75, 88, 90
	5.8K 17:9	5792 x 3056	24.1 x 12.7	23, 24, 25, 29, 47, 50, 59	1-60, 66, 72, 75, 88, 90
Anamorphic License	5.8K 6:5	5792 x 4854	24.1 x 20.2	23, 24, 25, 29, 47	1-48
Full-Frame License*	7.6K 16:9	7680x 4320	32.0 x 18.0	23, 24, 25, 29, 50, 59	1-60
	8.2K 17:9	8192 x 4320	34.1 x 18.0	23, 24, 25, 29, 47, 50, 59	1-60
	8.6K 3:2	8640 x 5760	35.9 x 24.0	23, 24, 25, 29	1-30

* The Anamorphic license is required to enable ratio setting, other than Off (1.0x), for the de-squeeze function.
** In high base ISO 3200, 1-7FPS is no available.

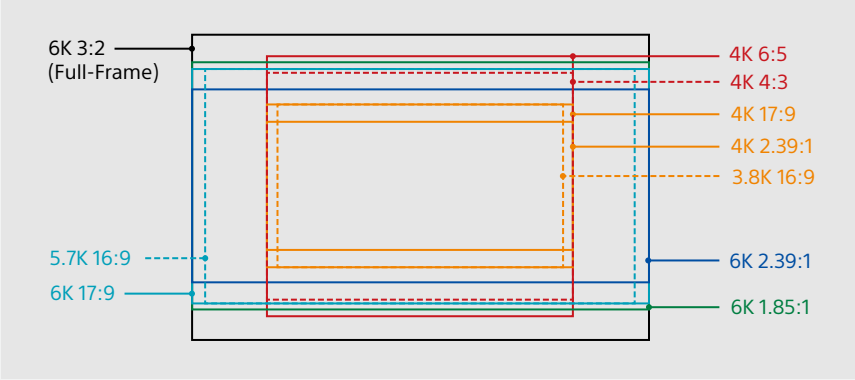

Imager mode details for 6K image sensor in V1.0

Software License	Imager mode	Resolution	W x H (mm)	Project Frame Rate	Select FPS**
License not Required*	3.8K 16:9	3840 x 2160	22.8 x 12.8	23, 24, 25, 29, 50, 59	1-60, 66, 72, 75, 88, 90, 96, 100, 110
	3.8K 16:9 Surround View	3840 x 2160 (4268 x 2400)	22.8 x 12.8 (25.4 x 14.3)	23, 24, 25, 29	1-48
	4K 2.39:1	4096 x 1716	24.3 x 10.3	23, 24, 25, 29, 47, 50, 59	1-60, 66, 72, 75, 88, 90, 96, 100, 110, 120
	4K 17:9	4096 x 2160	24.3 x 12.8	23, 24, 25, 29, 47, 50, 59	1-60, 66, 72, 75, 88, 90, 96, 100, 110
	4K 17:9 Surround View	4096 x 2160 (4552 x 2400)	24.3 x 12.8 (27.0 x 14.3)	23, 24, 25, 29	1-48
Anamorphic License	4K 4:3	4096 x 3024	24.3 x 18.0	23, 24, 25, 29, 47, 50, 59	1-60, 66, 72, 75
	4K 4:3 Surround View	4096 x 3024 (4552 x 3360)	24.3 x 18.0 (27.0 x 20.0)	23, 24, 25, 29	1-30
	4K 6:5	4096 x 3432	24.3 x 20.4	23, 24, 25, 29, 47, 50, 59	1-60, 66, 72
Full-Frame License*	5.7K 16:9	5674 x 3192	33.7 x 19.0	23, 24, 25, 29, 50, 59	1-60, 66, 72
	6K 2.39:1	6048 x 2534	35.9 x 15.0	23, 24, 25, 29, 47, 50, 59	1-60, 66, 72, 75, 88, 90
	6K 17:9	6054 x 3192	36.0 x 19.0	23, 24, 25, 29, 47, 50, 59	1-60, 66, 72
	6K 1.85:1	6054 x 3272	36.0 x 19.4	23, 24, 25, 29, 47, 50, 59	1-60, 66, 72
	6K 3:2	6048 x 4032	35.9 x 24.0	23, 24, 25, 29, 47, 50, 59	1-60

* The Anamorphic license is required to enable ratio setting, other than Off (1.0x), for the de-squeeze function.
** In high base ISO2500 and ProRes Recording mode simultaneously, 1-7FPS is no available.

VENICE 2 23.98/24.0p Recording format in V1.0

VENICE 2 with 8K image sensor (Mbps)

FORMAT	PROFILE	8.6K 3:2	8.2K 17:9	7.6K 16:9	5.8K 6:5	5.8K 17:9	5.4K 16:9
X-OCN	X-OCN XT	5,345	3,861	3,861	3,040	1,921	1,921
	X-OCN ST	3,658	2,642	2,642	2,080	1,315	1,315
	X-OCN LT	2,155	1,556	1,556	1,225	774	774
4K ProRes	ProRes 4444	–	1,131	–	1,131	1,131	–
	ProRes 422 HQ	–	754	–	754	754	–
QFHD ProRes	ProRes 4444	–	–	1,061	–	–	1,061
	ProRes 422 HQ	–	–	707	–	–	707

ProRes bitrate is “Target Data Rate”.
Please check Apple ProRes White Paper for meaning of “Target Data Rate”.
SV is a abbreviation of Surround View.

VENICE 2 with 6K image sensor (Mbps)

FORMAT	PROFILE	6K 3:2	6K 1.85:1	6K 17:9	6K 2.39:1	5.7K 16:9	4K 6:5	4K 4:3	4K 4:3 SV	4K 17:9	4K 17:9 SV	4K 2.39:1	3.8K 16:9	3.8K 16:9 SV
X-OCN	X-OCN XT	2,631	2,143	2,091	1,665	2,091	1,525	1342	1342	965	965	770	965	965
	X-OCN ST	1,800	1,467	1,431	1,140	1,431	1,044	919	919	661	661	527	661	661
	X-OCN LT	1,061	864	843	671	843	615	541	541	389	389	310	389	389
4K ProRes	ProRes 4444	–	–	1,131	1,131	–	1,131	–	–	1,131	1,131	1,131	–	–
	ProRes 422 HQ	–	–	754	754	–	754	–	–	754	754	754	–	–
QFHD ProRes	ProRes 4444	–	–	–	–	1,061	–	–	–	–	–	–	1,061	1,061
	ProRes 422 HQ	–	–	–	–	707	–	–	–	–	–	–	707	707

VENICE 2 60p Recording format in V1.0

VENICE 2 with 8K image sensor (Mbps)

FORMAT	PROFILE	8.6K 3:2	8.2K 17:9	7.6K 16:9	5.8K 6:5	5.8K 17:9	5.4K 16:9
X-OCN	X-OCN XT	–	–	–	–	4,802	4,802
	X-OCN ST	–	6,606	6,606	–	3,287	3,287
	X-OCN LT	–	3,891	3,891	–	1,936	1,936
4K ProRes	ProRes 4444	–	2,828	–	2,828	2,828	–
	ProRes 422 HQ	–	1,886	–	1,886	1,886	–
QFHD ProRes	ProRes 4444	–	–	2,652	–	–	2,652
	ProRes 422 HQ	–	–	1,768	–	–	1,768

ProRes bitrate is “Target Data Rate”.
Please check Apple ProRes White Paper for meaning of “Target Data Rate”.

VENICE 2 with 6K image sensor (Mbps)

FORMAT	PROFILE	6K 3:2	6K 1.85:1	6K 17:9	6K 2.39:1	5.7K 16:9	4K 6:5	4K 4:3	4K 4:3 SV	4K 17:9	4K 17:9 SV	4K 2.39:1	3.8K 16:9	3.8K 16:9 SV
X-OCN	X-OCN XT	6,577	5,357	5,227	4,163	5,227	3,813	3,355	–	2,413	–	1,924	2,413	–
	X-OCN ST	4,500	3,667	3,577	2,850	3,577	2,610	2,296	–	1,652	–	1,317	1,652	–
	X-OCN LT	2,651	2,160	2,108	1,678	2,108	1,537	1,353	–	973	–	776	973	–
4K ProRes	ProRes 4444	–	–	2,828	2,828	–	2,828	–	–	2,828	–	2,828	–	–
	ProRes 422 HQ	–	–	1,886	1,886	–	1,886	–	–	1,886	–	1,886	–	–
QFHD ProRes	ProRes 4444	–	–	–	–	2,652	–	–	–	–	–	–	2,652	–
	ProRes 422 HQ	–	–	–	–	1,768	–	–	–	–	–	–	1,768	–

VENICE 2 with 8K image sensor
Supported De-squeeze ratio

X-OCN Recording

Imager mode	W x H (mm)	Project Frame Rate	Select FPS	OFF (x1.0)	x1.25	x1.3	x1.5	x1.65	x1.8	x2.0
5.4K 16:9	22.6 x 12.7	23, 24, 25, 29, 50, 59	1*-60, 66, 72, 75, 88, 90	✓						
5.8K 17:9	24.1 x 12.7	23, 24, 25, 29, 47, 50, 59	1*-60, 66, 72, 75, 88, 90	✓	✓	✓		✓	✓	✓
5.8K 6:5	24.1 x 20.2	23, 24, 25, 29, 47	1*-48	✓						✓
7.6K 16:9	32.0 x 18.0	23, 24, 25, 29, 50, 59	1*-60	✓						
8.2K 17:9	34.1 x 18.0	23, 24, 25, 29, 47, 50, 59	1*-60	✓	✓	✓		✓	✓	✓
8.6K 3:2	35.9 x 24.0	23, 24, 25, 29	1*-30	✓	✓	✓	✓	✓	✓	✓

* In high base ISO 3200, 1-7FPS is no available.

4K/QFHD ProRes Recording

Imager mode	W x H (mm)	Project Frame Rate	Select FPS	OFF (x1.0)	x1.25	x1.3	x1.5	x1.65	x1.8	x2.0
5.4K 16:9	22.6 x 12.7	23, 24, 25, 29, 50, 59	1*-60, 66**, 72**, 75**	✓						
5.8K 17:9	24.1 x 12.7	23, 24, 25, 29, 50, 59	1*-60, 66**, 72**, 75**	✓						
5.8K 6:5	24.1 x 20.2	23, 24, 25, 29	1*-48							✓
7.6K 16:9	32.0 x 18.0	23, 24, 25, 29, 50, 59	1*-60	✓						
8.2K 17:9	34.1 x 18.0	23, 24, 25, 29, 50, 59	1*-60	✓						

* In high base ISO 3200, 1-7FPS is no available.
** ProRes 4444 is not supported.

VENICE 2 with 6K image sensor
Supported De-squeeze ratio

X-OCN Recording

Imager mode	W x H (mm)	Project Frame Rate	Select FPS	OFF (x1.0)	x1.25	x1.3	x1.5	x1.65	x1.8	x2.0
3.8K 16:9	22.8 x 12.8	23, 24, 25, 29, 50, 59	1-60, 66, 72, 75, 88, 90, 96, 100, 110	✓						
3.8K 16:9 Surround View	22.8 x 12.8 (25.4 x 14.3)	23, 24, 25, 29	1-48	✓						
4K 2.39:1	24.3 x 10.3	23, 24, 25, 29, 47, 50, 59	1-60, 66, 72, 75, 88, 90, 96, 100, 110, 120	✓						
4K 17:9	24.3 x 12.8	23, 24, 25, 29, 47, 50, 59	1-60, 66, 72, 75, 88, 90, 96, 100, 110	✓	✓	✓		✓	✓	✓
4K 17:9 Surround View	24.3 x 12.8 (27.0 x 14.3)	23, 24, 25, 29	1-48	✓	✓	✓		✓	✓	✓
4K 4:3	24.3 x 18.0	23, 24, 25, 29, 47, 50, 59	1-60, 66, 72, 75	✓		✓		✓	✓	✓
4K 4:3 Surround View	24.3 x 18.0 (27.0 x 20.0)	23, 24, 25, 29	1-30	✓		✓		✓	✓	✓
4K 6:5	24.3 x 20.4	23, 24, 25, 29, 47, 50, 59	1-60, 66, 72	✓						✓
5.7K 16:9	33.7 x 19.0	23, 24, 25, 29, 50, 59	1-60, 66, 72	✓						
6K 2.39:1	35.9 x 15.0	23, 24, 25, 29, 47, 50, 59	1-60, 66, 72, 75, 88, 90	✓						
6K 17:9	36.0 x 19.0	23, 24, 25, 29, 47, 50, 59	1-60, 66, 72	✓	✓	✓		✓	✓	✓
6K 1.85:1	36.0 x 19.4	23, 24, 25, 29, 47, 50, 59	1-60, 66, 72	✓						
6K 3:2	35.9 x 24.0	23, 24, 25, 29, 47, 50, 59	1-60	✓	✓	✓	✓	✓	✓	✓

4K/QFHD ProRes Recording

Imager mode	W x H (mm)	Project Frame Rate	Select FPS	OFF (x1.0)	x1.25	x1.3	x1.5	x1.65	x1.8	x2.0
3.8K 16:9	22.8 x 12.8	23, 24, 25, 29, 50, 59	1-60, 66*, 72*, 75*, 88*, 90*	✓						
3.8K 16:9 Surround View	22.8 x 12.8 (25.4 x 14.3)	23, 24, 25, 29	1-48	✓						
4K 2.39:1	24.3 x 10.3	23, 24, 25, 29, 50, 59	1-60, 66*, 72*, 75*, 88*, 90*	✓						
4K 17:9	24.3 x 12.8	23, 24, 25, 29, 50, 59	1-60, 66*, 72*, 75*, 88*, 90*	✓						
4K 17:9 Surround View	24.3 x 12.8 (27.0 x 14.3)	23, 24, 25, 29	1-48	✓						
4K 6:5	24.3 x 20.4	23, 24, 25, 29, 50, 59	1-60, 66*, 72*							✓
5.7K 16:9	33.7 x 19.0	23, 24, 25, 29, 50, 59	1-60, 66*, 72*	✓						
6K 2.39:1	35.9 x 15.0	23, 24, 25, 29, 50, 59	1-60, 66*, 72*, 75*	✓						
6K 17:9	36.0 x 19.0	23, 24, 25, 29, 50, 59	1-60, 66*, 72*	✓						

* ProRes 4444 is not supported.

X-OCN – 16-bit eXtended tonal range Original Camera Negative

Full 4K, 6K or 8K resolution, with extraordinary color reproduction, nicely suits Sony's third generation color development, S-Gamut 3. In particular, 16-bit scene linear tonal gradation retains the camera's full dynamic range, with far greater capacity for visual expression than 10-bit or 12-bit digital formats.

16-bit X-OCN offers significant file size reduction, which makes working with full resolution content from VENICE 2's 8.6K or 6K sensor far more practical in terms of file transfer times and storage requirements.

VENICE 2 with 8K image sensor recording time by AXS-A1TS66, 1 TB memory

Imager mode	Project FPS	X-OCN XT	X-OCN ST	X-OCN LT	4K ProRes 4444	4K ProRes 422 HQ	QFHD ProRes 4444	QFHD ProRes 422 HQ
5.4K 16:9	23/24	65 min	95 min	160 min	–	–	104 min	156 min
	25	62	91	154	–	–	100	150
	29	52	76	128	–	–	83	125
	50	31	45	77	–	–	50	75
	59	26	38	64	–	–	41	62
5.8K 17:9	23/24	65	95	160	98	146	–	–
	25	62	91	154	94	140	–	–
	29	52	76	128	78	117	–	–
	47	32	47	80	–	–	–	–
	50	31	45	77	47	70	–	–
	59	26	38	64	39	58	–	–
5.8K 6:5	23/24	41	60	102	98	146	–	–
	25	39	57	98	94	140	–	–
	29	33	48	81	78	117	–	–
	47	20	30	51	–	–	–	–
7.6K 16:9	23/24	32	47	80	–	–	104	156
	25	31	45	77	–	–	100	150
	29	25	37	64	–	–	83	125
	50	–	22	38	–	–	50	75
	59	–	18	32	–	–	41	62
8.2K 17:9	23/24	32	47	80	98	146	–	–
	25	31	45	77	94	140	–	–
	29	25	37	64	78	117	–	–
	47	–	23	40	–	–	–	–
	50	–	22	38	47	70	–	–
	59	–	18	32	39	58	–	–
8.6K 3:2	23/24	23	34	58	–	–	–	–
	25	22	32	55	–	–	–	–
	29	18	27	46	–	–	–	–

* Recording one clip. When several clips are recorded, time should be shorten than the chart.

AXSM Card A-Series

AXSM

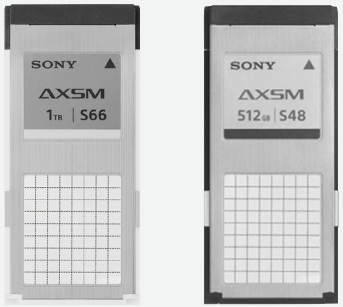

VENICE 2 with 6K image sensor recording time by AXS-A1TS66, 1 TB memory

Imager mode	Project FPS	X-OCN XT	X-OCN ST	X-OCN LT	4K ProRes 4444	4K ProRes 422 HQ	QFHD ProRes 4444	QFHD ProRes 422 HQ
3.8K 16:9	23/24	129 min	188 min	316 min	–	–	104 min	156 min
	25	124	180	304	–	–	100	150
	29	103	150	254	–	–	83	125
	50	62	90	153	–	–	50	75
	59	51	75	127	–	–	41	62
4K 2.39:1	23/24	161	235	395	98	146	–	–
	25	155	225	380	94	140	–	–
	29	129	188	317	78	117	–	–
	47	81	118	199	–	–	–	–
	50	77	113	191	47	70	–	–
	59	64	94	159	39	58	–	–
4K 17:9	23/24	129	188	316	98	146	–	–
	25	124	180	304	94	140	–	–
	29	103	150	254	78	117	–	–
	47	64	94	159	–	–	–	–
	50	62	90	153	47	70	–	–
	59	51	75	127	39	58	–	–
4K 4.3	23/24	93	135	229	–	–	–	–
	25	89	130	220	–	–	–	–
	29	74	108	183	–	–	–	–
	47	46	68	115	–	–	–	–
	50	44	65	110	–	–	–	–
	59	37	54	92	–	–	–	–
4K 6.5	23/24	81	119	201	98	146	–	–
	25	78	114	193	94	140	–	–
	29	65	95	161	78	117	–	–
	47	41	59	101	–	–	–	–
	50	39	57	97	47	70	–	–
	59	32	47	81	39	58	–	–
5.7K 16:9	23/24	59	87	147	–	–	104	156
	25	57	83	141	–	–	100	150
	29	47	69	118	–	–	83	125
	50	28	42	71	–	–	50	75
	59	23	35	59	–	–	41	62

Imager mode	Project FPS	X-OCN XT	X-OCN ST	X-OCN LT	4K ProRes 4444	4K ProRes 422 HQ	QFHD ProRes 4444	QFHD ProRes 422 HQ
6K 2.39:1	23/24	75	109	185	98	146	–	–
	25	72	105	177	94	140	–	–
	29	60	87	148	78	117	–	–
	47	37	54	92	–	–	–	–
	50	36	52	89	47	70	–	–
	59	30	43	74	39	58	–	–
6K 17:9	23/24	59	87	147	98	146	–	–
	25	57	83	141	94	140	–	–
	29	47	69	118	78	117	–	–
	47	29	43	74	–	–	–	–
	50	28	42	71	47	70	–	–
	59	23	35	59	39	58	–	–
6K 1.85:1	23/24	58	85	144	–	–	–	–
	25	56	81	138	–	–	–	–
	29	46	68	115	–	–	–	–
	47	29	42	72	–	–	–	–
	50	28	40	69	–	–	–	–
	59	23	34	57	–	–	–	–
6K 3:2	23/24	47	69	117	–	–	–	–
	25	45	66	112	–	–	–	–
	29	38	55	94	–	–	–	–
	47	23	34	58	–	–	–	–
	50	22	33	56	–	–	–	–
	59	19	27	47	–	–	–	–

*Recording one clip. When several clips are recorded, time should be shorten than the chart.

VENICE 2 with 8K image sensor
Supporting format and FPS in AXS memory

Profile	Img. Mode	23/24	25	30	48	50	60	66	72	75	88	90	96	100	110	120
X-OCN XT	8.6K 3:2	S66	S66	S66												
	8.2K 17:9	S66/S48	S66/S48	S66/S48	N/A	N/A	N/A									
	7.6K 16:9	S66/S48	S66/S48	S66/S48	N/A	N/A	N/A									
	5.8K 6:5	S66/S48	S66/S48	S66/S48	S66											
	5.8K 17:9	S66/S48/S24	S66/S48/S24	S66/S48/S24	S66/S48	S66/S48	S66/S48	S66	S66	S66	N/A	N/A				
	5.4K 16:9	S66/S48/S24	S66/S48/S24	S66/S48/S24	S66/S48	S66/S48	S66/S48	S66	S66	S66	N/A	N/A				

Profile	Img. Mode	23/24	25	30	48	50	60	66	72	75	88	90	96	100	110	120
X-OCN ST	8.6K 3:2	S66/S48	S66/S48	S66/S48												
	8.2K 17:9	S66/S48	S66/S48	S66/S48	S66	S66	S66									
	7.6K 16:9	S66/S48	S66/S48	S66/S48	S66	S66	S66									
	5.8K 6:5	S66/S48/S24	S66/S48/S24	S66/S48	S66/S48											
	5.8K 17:9	S66/S48/S24	S66/S48/S24	S66/S48/S24	S66/S48	S66/S48	S66/S48	S66/S48	S66/S48	S66/S48	S66	S66				
	5.4K 16:9	S66/S48/S24	S66/S48/S24	S66/S48/S24	S66/S48	S66/S48	S66/S48	S66/S48	S66/S48	S66/S48	S66	S66				

Profile	Img. Mode	23/24	25	30	48	50	60	66	72	75	88	90	96	100	110	120
X-OCN LT	8.6K 3:2	S66/S48/S24	S66/S48/S24	S66/S48												
	8.2K 17:9	S66/S48/S24	S66/S48/S24	S66/S48/S24	S66/S48	S66/S48	S66/S48									
	7.6K 16:9	S66/S48/S24	S66/S48/S24	S66/S48/S24	S66/S48	S66/S48	S66/S48									
	5.8K 6:5	S66/S48/S24	S66/S48/S24	S66/S48/S24	S66/S48/S24											
	5.8K 17:9	S66/S48/S24	S66/S48/S24	S66/S48/S24	S66/S48/S24	S66/S48/S24	S66/S48/S24	S66/S48/S24	S66/S48/S24	S66/S48/S24	S66/S48	S66/S48				
	5.4K 16:9	S66/S48/S24	S66/S48/S24	S66/S48/S24	S66/S48/S24	S66/S48/S24	S66/S48/S24	S66/S48/S24	S66/S48/S24	S66/S48/S24	S66/S48	S66/S48				

VENICE 2 with 8K image sensor
Supporting format and FPS in AXS memory

Profile	Img. Mode	23/24	25	30	48	50	60	66	72	75	88	90	96	100	110	120
4K ProRes 4444	8.2K 17:9	S66/S48/S24	S66/S48/S24	S66/S48/S24	S66/S48	S66/S48	S66/S48									
	5.8K 6:5	S66/S48/S24	S66/S48/S24	S66/S48/S24	S66/S48											
	5.8K 17:9	S66/S48/S24	S66/S48/S24	S66/S48/S24	S66/S48	S66/S48	S66/S48									

Profile	Img. Mode	23/24	25	30	48	50	60	66	72	75	88	90	96	100	110	120
4K ProRes 422 HQ	8.2K 17:9	S66/S48/S24	S66/S48/S24	S66/S48/S24	S66/S48/S24	S66/S48/S24	S66/S48/S24									
	5.8K 6:5	S66/S48/S24	S66/S48/S24	S66/S48/S24	S66/S48/S24											
	5.8K 17:9	S66/S48/S24	S66/S48/S24	S66/S48/S24	S66/S48/S24	S66/S48/S24	S66/S48/S24	S66/S48/S24	S66/S48	S66/S48						

Profile	Img. Mode	23/24	25	30	48	50	60	66	72	75	88	90	96	100	110	120
QFHD ProRes 4444	7.6K 16:9	S66/S48/S24	S66/S48/S24	S66/S48/S24	S66/S48/S24	S66/S48/S24	S66/S48									
	5.4K 16:9	S66/S48/S24	S66/S48/S24	S66/S48/S24	S66/S48/S24	S66/S48/S24	S66/S48									

Profile	Img. Mode	23/24	25	30	48	50	60	66	72	75	88	90	96	100	110	120
QFHD ProRes 422 HQ	7.6K 16:9	S66/S48/S24	S66/S48/S24	S66/S48/S24	S66/S48/S24	S66/S48/S24	S66/S48/S24									
	5.4K 16:9	S66/S48/S24	S66/S48/S24	S66/S48/S24	S66/S48/S24	S66/S48/S24	S66/S48/S24	S66/S48/S24	S66/S48/S24	S66/S48/S24						

VENICE 2 with 6K image sensor
Supporting format and FPS in AXS memory

Profile	Img. Mode	23/24	25	30	48	50	60	66	72	75	88	90	96	100	110	120
X-OCN XT	6K 3:2	S66/S48	S66/S48	S66/S48	S66	S66	S66									
	6K 1.85:1	S66/S48/S24	S66/S48/S24	S66/S48	S66/S48	S66/S48	S66	S66	S66							
	6K 17:9	S66/S48/S24	S66/S48/S24	S66/S48	S66/S48	S66/S48	S66	S66	S66							
	6K 2.39:1	S66/S48/S24	S66/S48/S24	S66/S48/S24	S66/S48	S66/S48	S66/S48	S66/S48	S66	S66	S66	S66				
	5.7K 16:9	S66/S48/S24	S66/S48/S24	S66/S48	S66/S48	S66/S48	S66	S66	S66							
	4K 6:5	S66/S48/S24	S66/S48/S24	S66/S48/S24	S66/S48	S66/S48	S66/S48	S66/S48	S66/S48							
	4K 4:3	S66/S48/S24	S66/S48/S24	S66/S48/S24	S66/S48	S66/S48	S66/S48	S66/S48	S66/S48	S66/S48						
	4K 17:9	S66/S48/S24	S66/S48/S24	S66/S48/S24	S66/S48/S24	S66/S48/S24	S66/S48/S24	S66/S48	S66/S48	S66/S48	S66/S48	S66/S48	S66/S48	S66/S48	S66/S48	
	4K 2.39:1	S66/S48/S24	S66/S48/S24	S66/S48/S24	S66/S48/S24	S66/S48/S24	S66/S48/S24	S66/S48/S24	S66/S48/S24	S66/S48/S24	S66/S48	S66/S48	S66/S48	S66/S48	S66/S48	S66/S48
	3.8K 16:9	S66/S48/S24	S66/S48/S24	S66/S48/S24	S66/S48/S24	S66/S48/S24	S66/S48/S24	S66/S48	S66/S48	S66/S48	S66/S48	S66/S48	S66/S48	S66/S48	S66/S48	

Profile	Img. mode	23/24	25	30	48	50	60	66	72	75	88	90	96	100	110	120
X-OCN ST	6K 3:2	S66/S48/S24	S66/S48/S24	S66/S48/S24	S66/S48	S66/S48	S66/S48									
	6K 1.85:1	S66/S48/S24	S66/S48/S24	S66/S48/S24	S66/S48	S66/S48	S66/S48	S66/S48	S66/S48							
	6K 17:9	S66/S48/S24	S66/S48/S24	S66/S48/S24	S66/S48	S66/S48	S66/S48	S66/S48	S66/S48							
	6K 2.39:1	S66/S48/S24	S66/S48/S24	S66/S48/S24	S66/S48/S24	S66/S48/S24	S66/S48	S66/S48	S66/S48	S66/S48	S66/S48	S66/S48				
	5.7K 16:9	S66/S48/S24	S66/S48/S24	S66/S48/S24	S66/S48	S66/S48	S66/S48	S66/S48	S66/S48							
	4K 6:5	S66/S48/S24	S66/S48/S24	S66/S48/S24	S66/S48/S24	S66/S48/S24	S66/S48	S66/S48	S66/S48							
	4K 4:3	S66/S48/S24	S66/S48/S24	S66/S48/S24	S66/S48/S24	S66/S48/S24	S66/S48/S24	S66/S48	S66/S48	S66/S48						
	4K 17:9	S66/S48/S24	S66/S48/S24	S66/S48/S24	S66/S48/S24	S66/S48/S24	S66/S48/S24	S66/S48/S24	S66/S48/S24	S66/S48/S24	S66/S48/S24	S66/S48/S24	S66/S48	S66/S48	S66/S48	
	4K 2.39:1	S66/S48/S24	S66/S48/S24	S66/S48/S24	S66/S48/S24	S66/S48/S24	S66/S48/S24	S66/S48/S24	S66/S48/S24	S66/S48/S24	S66/S48/S24	S66/S48/S24	S66/S48/S24	S66/S48/S24	S66/S48/S24	S66/S48
	3.8K 16:9	S66/S48/S24	S66/S48/S24	S66/S48/S24	S66/S48/S24	S66/S48/S24	S66/S48/S24	S66/S48/S24	S66/S48/S24	S66/S48/S24	S66/S48/S24	S66/S48/S24	S66/S48	S66/S48	S66/S48	

Profile	Img. mode	23/24	25	30	48	50	60	66	72	75	88	90	96	100	110	120
X-OCN LT	6K 3:2	S66/S48/S24	S66/S48/S24	S66/S48/S24	S66/S48/S24	S66/S48/S24	S66/S48									
	6K 1.85:1	S66/S48/S24	S66/S48/S24	S66/S48/S24	S66/S48/S24	S66/S48/S24	S66/S48/S24	S66/S48/S24	S66/S48							
	6K 17:9	S66/S48/S24	S66/S48/S24	S66/S48/S24	S66/S48/S24	S66/S48/S24	S66/S48/S24	S66/S48/S24	S66/S48							
	6K 2.39:1	S66/S48/S24	S66/S48/S24	S66/S48/S24	S66/S48/S24	S66/S48/S24	S66/S48/S24	S66/S48/S24	S66/S48/S24	S66/S48/S24	S66/S48/S24	S66/S48				
	5.7K 16:9	S66/S48/S24	S66/S48/S24	S66/S48/S24	S66/S48/S24	S66/S48/S24	S66/S48/S24	S66/S48/S24	S66/S48							
	4K 6:5	S66/S48/S24	S66/S48/S24	S66/S48/S24	S66/S48/S24	S66/S48/S24	S66/S48/S24	S66/S48/S24	S66/S48/S24							
	4K 4:3	S66/S48/S24	S66/S48/S24	S66/S48/S24	S66/S48/S24	S66/S48/S24	S66/S48/S24	S66/S48/S24	S66/S48/S24	S66/S48/S24						
	4K 17:9	S66/S48/S24	S66/S48/S24	S66/S48/S24	S66/S48/S24	S66/S48/S24	S66/S48/S24	S66/S48/S24	S66/S48/S24	S66/S48/S24	S66/S48/S24	S66/S48/S24	S66/S48/S24	S66/S48/S24	S66/S48/S24	
	4K 2.39:1	S66/S48/S24	S66/S48/S24	S66/S48/S24	S66/S48/S24	S66/S48/S24	S66/S48/S24	S66/S48/S24	S66/S48/S24	S66/S48/S24	S66/S48/S24	S66/S48/S24	S66/S48/S24	S66/S48/S24	S66/S48/S24	S66/S48/S24
	3.8K 16:9	S66/S48/S24	S66/S48/S24	S66/S48/S24	S66/S48/S24	S66/S48/S24	S66/S48/S24	S66/S48/S24	S66/S48/S24	S66/S48/S24	S66/S48/S24	S66/S48/S24	S66/S48/S24	S66/S48/S24	S66/S48/S24	

VENICE 2 with 6K image sensor
Supporting format and FPS in AXS memory

Profile	Img. mode	23/24	25	30	48	50	60	66	72	75	88	90	96	100	110	120
4K ProRes 4444	6K 17:9	S66/S48/S24	S66/S48/S24	S66/S48/S24	S66/S48	S66/S48	S66/S48									
	6K 2.39:1	S66/S48/S24	S66/S48/S24	S66/S48/S24	S66/S48	S66/S48	S66/S48									
	4K 6:5	S66/S48/S24	S66/S48/S24	S66/S48/S24	S66/S48	S66/S48	S66/S48									
	4K 17:9	S66/S48/S24	S66/S48/S24	S66/S48/S24	S66/S48	S66/S48	S66/S48									
	4K 2.39:1	S66/S48/S24	S66/S48/S24	S66/S48/S24	S66/S48	S66/S48	S66/S48									

Profile	Img. mode	23/24	25	30	48	50	60	66	72	75	88	90	96	100	110	120
4K ProRes 422 HQ	6K 17:9	S66/S48/S24	S66/S48/S24	S66/S48/S24	S66/S48/S24	S66/S48/S24	S66/S48/S24	S66/S48/S24	S66/S48							
	6K 2.39:1	S66/S48/S24	S66/S48/S24	S66/S48/S24	S66/S48/S24	S66/S48/S24	S66/S48/S24	S66/S48/S24	S66/S48	S66/S48						
	4K 6:5	S66/S48/S24	S66/S48/S24	S66/S48/S24	S66/S48/S24	S66/S48/S24	S66/S48/S24	S66/S48/S24	S66/S48							
	4K 17:9	S66/S48/S24	S66/S48/S24	S66/S48/S24	S66/S48/S24	S66/S48/S24	S66/S48/S24	S66/S48/S24	S66/S48	S66/S48	S66/S48	S66/S48				
	4K 2.39:1	S66/S48/S24	S66/S48/S24	S66/S48/S24	S66/S48/S24	S66/S48/S24	S66/S48/S24	S66/S48/S24	S66/S48	S66/S48	S66/S48	S66/S48				

Profile	Img. mode	23/24	25	30	48	50	60	66	72	75	88	90	96	100	110	120
QFHD ProRes 4444	5.7K 16:9	S66/S48/S24	S66/S48/S24	S66/S48/S24	S66/S48/S24	S66/S48/S24	S66/S48									
	3.8K 16:9	S66/S48/S24	S66/S48/S24	S66/S48/S24	S66/S48/S24	S66/S48/S24	S66/S48									

Profile	Img. mode	23/24	25	30	48	50	60	66	72	75	88	90	96	100	110	120
QFHD ProRes 422 HQ	5.7K 16:9	S66/S48/S24	S66/S48/S24	S66/S48/S24	S66/S48/S24	S66/S48/S24	S66/S48/S24	S66/S48/S24	S66/S48/S24							
	3.8K 16:9	S66/S48/S24	S66/S48/S24	S66/S48/S24	S66/S48/S24	S66/S48/S24	S66/S48/S24	S66/S48/S24	S66/S48/S24	S66/S48/S24	S66/S48	S66/S48				

Simple and intuitive menu operation

HOME

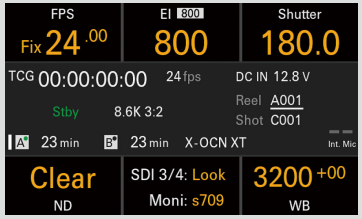

Quick access for setting FPS, EI, Shutter, ND, Look and WB by six buttons at Sub Display top and bottom

MENU

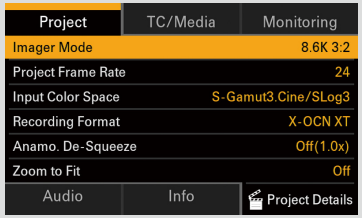

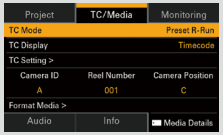

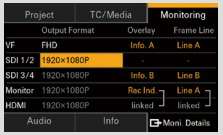

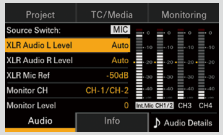

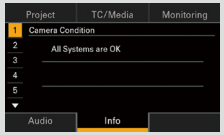

Basic camera settings for shooting in four TAB MENUs and one info page.
And each TAB menu has quick detail setting page in Full Menu.

FULL MENU

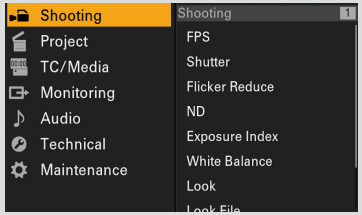

FULL MENU appears by holding MENU button for 2 seconds or pushing Rotary Encoder and menu button same time, which has all camera control settings for technical engineers.

Operator Display

Basic camera setting on simple OLED display and three buttons.

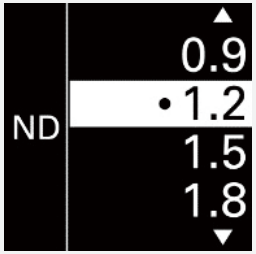

4K LUTs for monitors

For those who want to see on-set images that are closer to the final look of their project, VENICE 2 can apply 4K or HD LUTs to its monitor output. HD output also benefits from improved LUT processing, with richer images and color gradation.

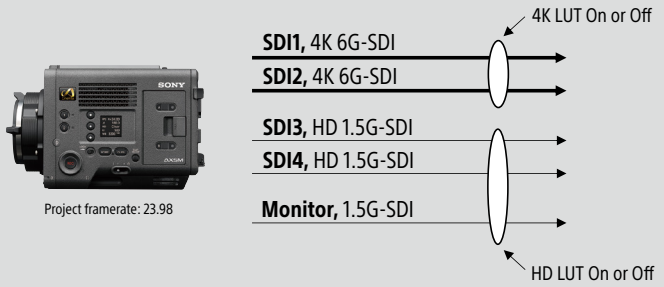

Zoom to Fit for monitoring

Full-frame 3:2 recording used to mean that users could not see their image without black bars at the sides of their monitors. Our Zoom to Fit function allows VENICE 2 to record in Full-frame 3:2 and deliver a 17:9/16:9 monitor output simultaneously, so directors, cinematographers and crew have a bigger picture for on-set monitoring.

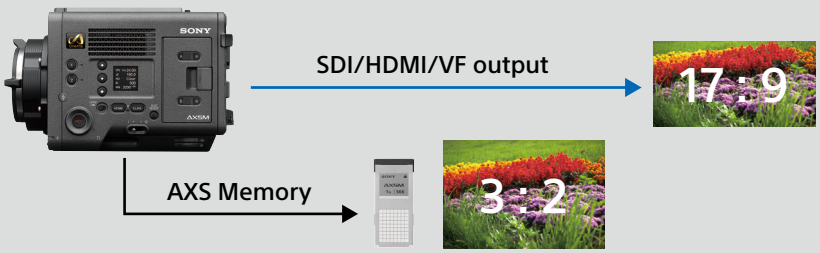

Ethernet and Wi-Fi control

Using Wi-Fi or an Ethernet connection, LUTs, CDLs and ART files can all be imported directly onto cameras, so there's no need to physically upload them using SD cards. CDLs can then be controlled and adjusted via a web interface and embedded in clip metadata.

Power supply to the camera is needed.

* Image is from VENICE 2 with 8K image sensor

VF (LEMO 26pin)

DC 24V Output (Fischer 3pin)
Lens 12pin

Phone Jack

HDMI (A Type)
SDI1 (BNC)
SDI2 (BNC)
SDI3 (BNC)
SDI4 (BNC)
DC INPUT 11-17V, 22-32V (XLR 4pin)

USB (Type A, Top)

Internal Mic

DC 24V Output (Fischer 3pin)
DC 12V Output (Lemo 2pin)
MONITOR Output (BNC)
Genlock Input (BNC)
Timecode Input (BNC)
AUX (BNC)
Ethernet (RJ45)
Remote (8pin)

SD Card Slot

Audio Input (XLR 5pin)

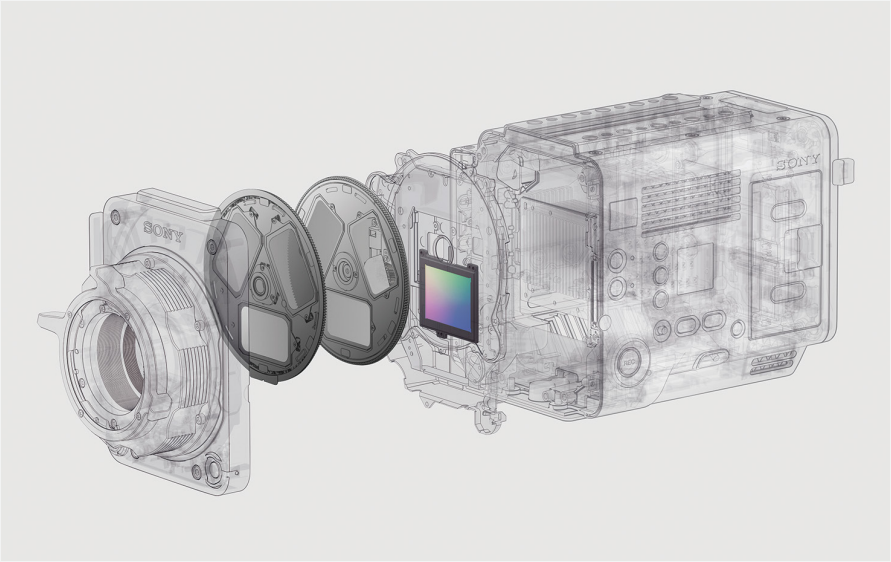

Internal 8-step Mechanical ND Filters

VENICE 2 follows the world first of VENICE, with a servo-controlled 8-step Mechanical ND filter mechanism built into the camera chassis. It offers a massive ND of 0.3 (1/2 = 1 stop) to 2.4 (1/256 = 8 stops) range that reduces time lost on set changing external filters. The ND filters also greatly increase flexibility when being controlled remotely on drones and cranes, or in an underwater housing.

Extension System* for VENICE 2 with 6K image sensor

VENICE 2 users can expect the same image quality and integrity when using the robust Extension System, which makes VENICE 2 more mobile and discreet. The system is fully compatible with VENICE and VENICE 2 camera systems that use the 6K image sensor block**, and is ideal for countless mounting setups and filming scenarios. These could include use with gimbals, handheld stabilizers, underwater and helicopter housings, and 3D/VR rigs, as well as in tight and unconventional spaces, such as in vehicles, on cranes or Russian arms.

* CBK-3610XS

** Extension System for VENICE 2 8K is planned to be released by early 2023

VENICE

VENICE 2

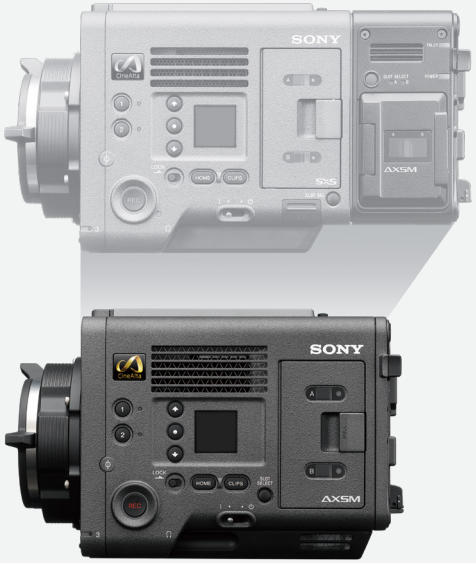

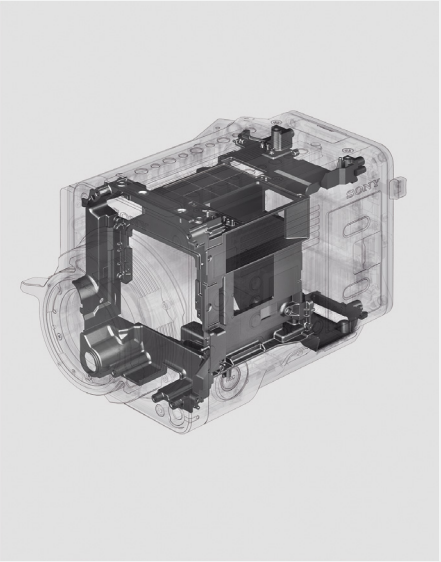

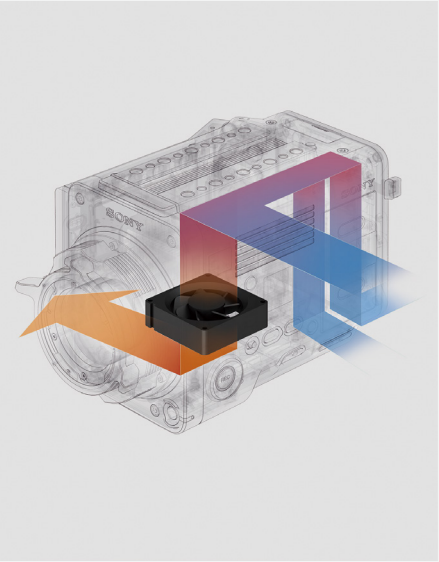

Internal 16-bit X-OCN and 4K ProRes Recording in a Compact body

New for VENICE 2, cinematographers and colorists can unlock the incredible creative possibilities of 16-bit X-OCN recording without an external recorder. Users can enjoy the full dynamic range and color reproduction of the image sensor, capturing in 4K ProRes 4444 and 422 HQ. With such a compact design, and no external recorder, set-up is faster, simpler and easier, particularly for gimbals, Steadicams and drones.

Engineered to Survive

VENICE 2's chassis is engineered to be amazingly robust and has been rigorously tested in the harshest conditions as well as main frame structure enabled to design the body to be more durable. Its ventilation system is completely isolated from all electronic components to prevent ingress of dust, sand and splash. The silent-running fan can be cleaned or even swapped out on set quickly and easily.

Dimension

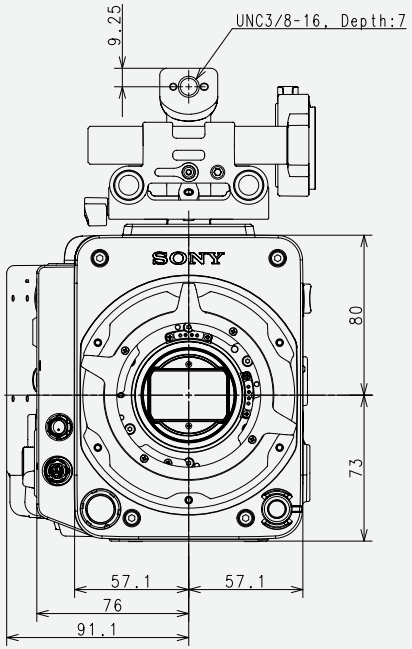
UNC3/8-16, Depth:7
9.25
SONY
80
73
57.1
57.1
76
91.1

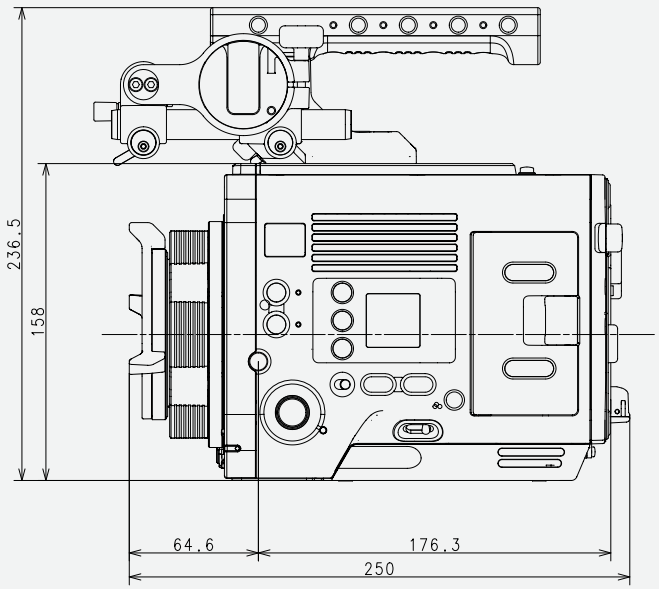
236.5
158
64.6
176.3
250

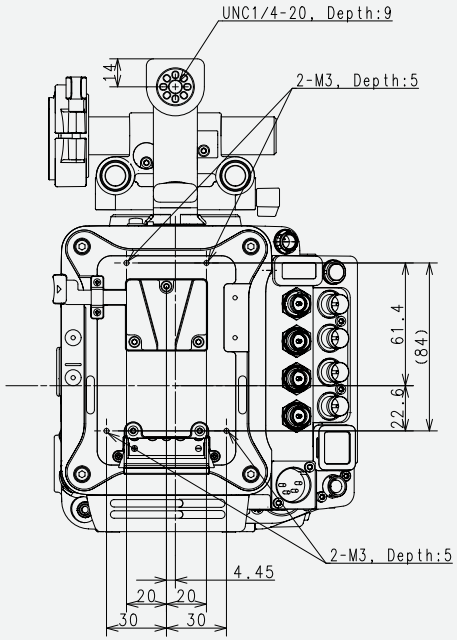
UNC1/4-20, Depth:9
14
2-M3, Depth:5
61.4
(84)
22.6
2-M3, Depth:5
4.45
20
20
30
30

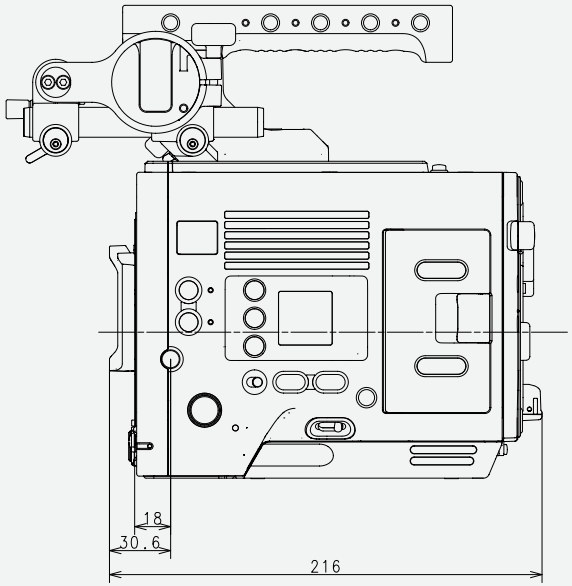
18
30.6
216

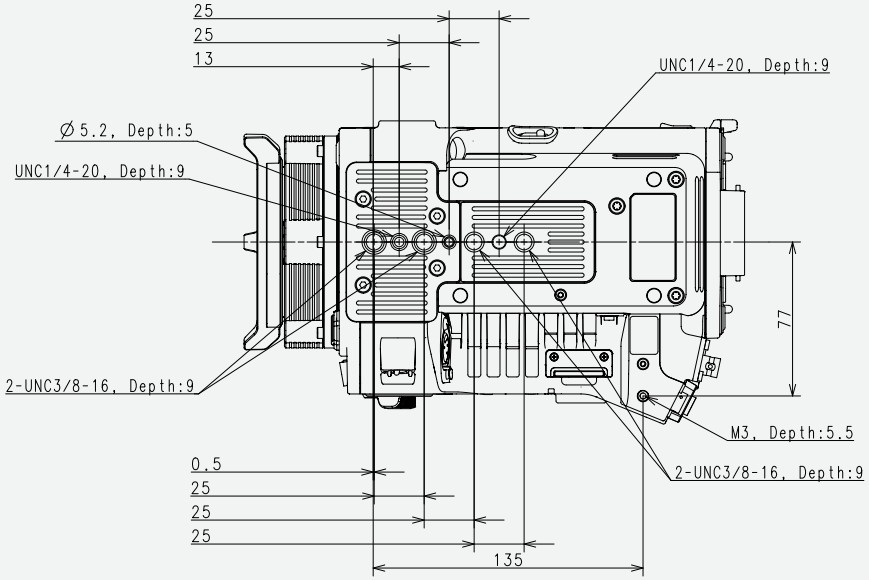
25
25
13
UNC1/4-20, Depth:9
∅5.2, Depth:5
UNC1/4-20, Depth:9
2-UNC3/8-16, Depth:9
77
M3, Depth:5.5
2-UNC3/8-16, Depth:9
0.5
25
25
25
135

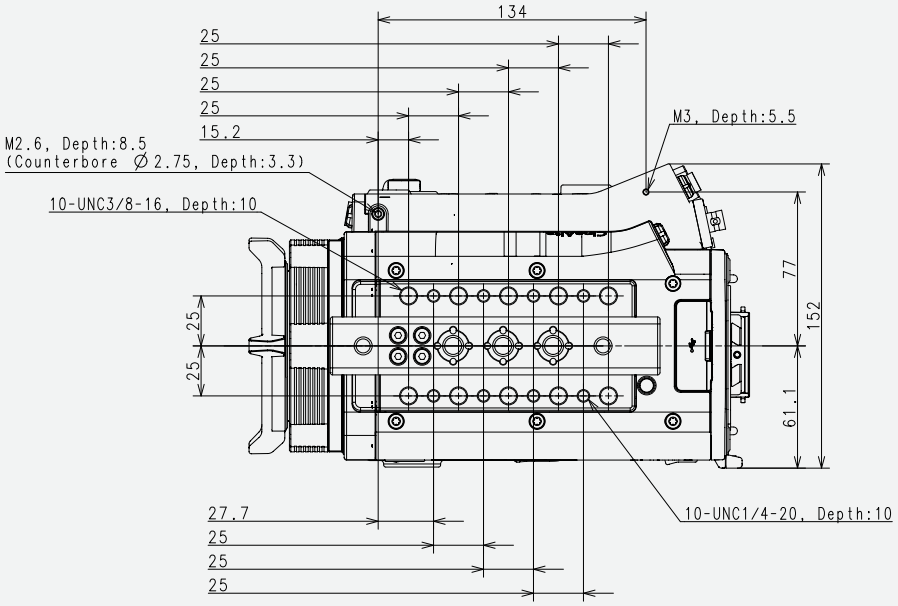
134
25
25
25
25
15.2
M2.6, Depth:8.5
(Counterbore ∅2.75, Depth:3.3)
M3, Depth:5.5
10-UNC3/8-16, Depth:10
25
25
77
152
61.1
10-UNC1/4-20, Depth:10
27.7
25
25
25

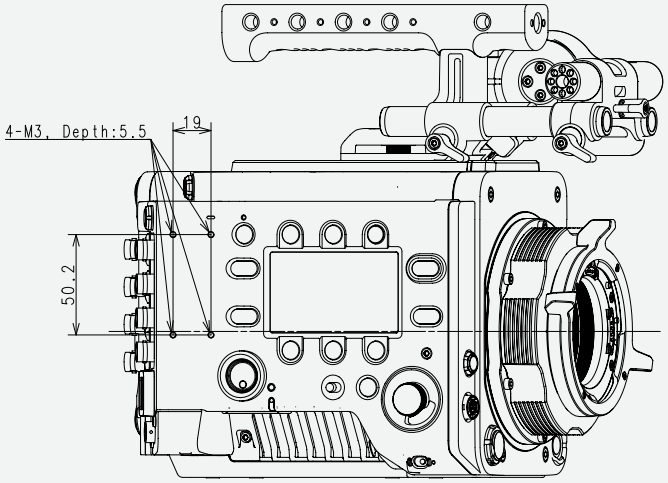
4-M3, Depth:5.5
19
50.2

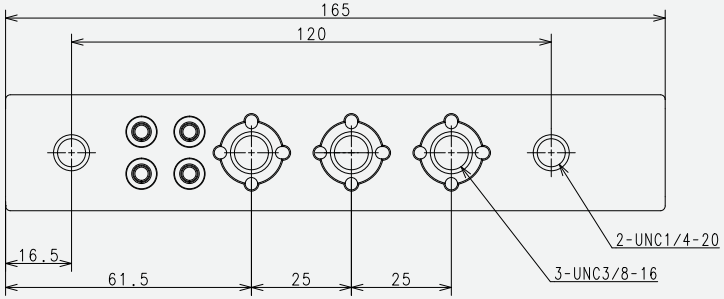
165
120
2-UNC1/4-20
16.5
61.5
25
25
3-UNC3/8-16

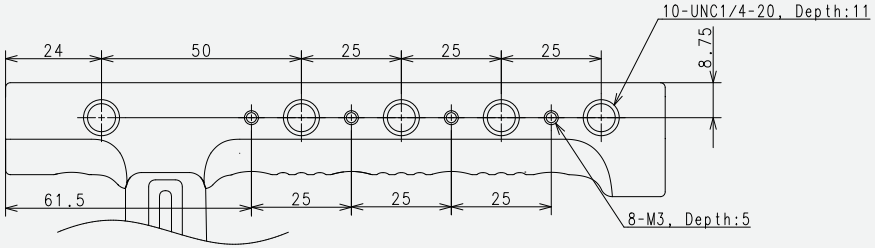
10-UNC1/4-20, Depth:11
24
50
25
25
25
8.75
61.5
25
25
25
8-M3, Depth:5

System Configuration

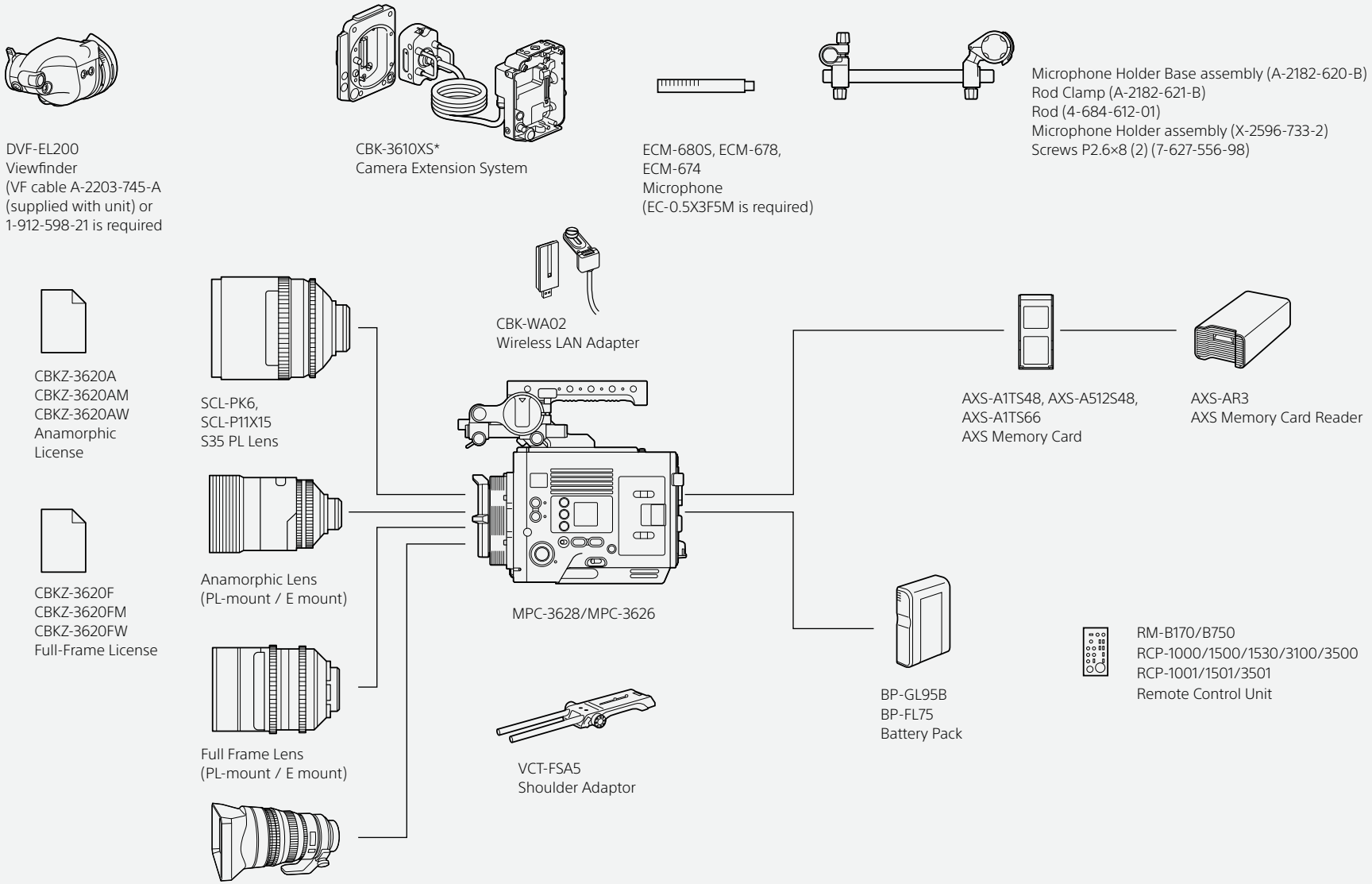

* 6K Image Sensor only

Specifications

	VENICE 2 with 8.6K image sensor (MPC-3628)	VENICE 2 with 6K image sensor (MPC-3626)
General		
Power Requirements	DC12 V (11.0 to 17.0 V) DC24 V (22.0 to 32.0 V)	
Power Consumption (Condition: 12 V DC Input, Temp 25 °C, without accessories)	Approx. 76 W (When recording X-OCN XT, 8.6K 3:2, 24FPS)	Approx. 73 W (When recording X-OCN XT, 6K 3:2, 24FPS)
Operating Temperature	0 to 40 °C	
Storage Temperature	-20 °C to 60 °C	
Mass (without lens, handle, VF attachment and accessories)	Approx: 4.3 kg (9 lb 7.7 oz)	Approx: 4.2 kg (9 lb 4.2 oz)
Dimensions	152 x 158 x 250 mm (6 x 6 1/4 x 9 7/8 inch, WxHxD, excluding protrusions)	
Camera		
Imaging Device	35 mm full size, single-chip CMOS imager sensor	
Imaging Device Pixel Count	50.0M (Total)	24.8M (Total)
Built-In ND Filters	Clear, 0.3 (1/2), 0.6 (1/4), 0.9 (1/8), 1.2 (1/16), 1.5 (1/32), 1.8 (1/64), 2.1 (1/128), 2.4 (1/256)	
ISO Sensitivity	ISO800, ISO3200 (Dual Base ISO)	ISO500, ISO2500 (Dual Base ISO)
Lens Mount	PL Mount E-mount (lever lock type, without supplied PL lens mount adaptor)	
Latitude	16 Stop	15+ Stop
Select FPS	5.8K 17:9 1-90FPS, 5.4K 16:9 1-90FPS 5.8K 6:5 1-48FPS** 8.2K 17:9 1-60FPS***, 7.6K 16:9 1-60FPS*** 8.6K 3:2 1-30FPS***	4K 2.39:1 1-120FPS, 4K 17:9/3.8K 16:9 1-110FPS 4K 4:3 1-75FPS**, 4K 6:5 1-72FPS** 6K 2.39:1 1-90FPS***, 6K 17:9/6K 1.85:1/ 5.7K 16:9 1-72FPS*** 6K 3:2 1-60FPS***
Recording		
Recording Format (X-OCN)	X-OCN XT/ST/LT: 8.6K 3:2 (8640 x 5760):23.98p, 24p, 25p, 29.97p 8.2K 17:9 (8192 x 4320) :23.98p, 24p, 25p, 29.97p, 47.95p*, 50p*, 59.94p* 7.6K 16:9 (7680 x 4320) :23.98p, 24p, 25p, 29.97p, 50p*, 59.94p* 5.8K 6:5 (5792 x 4854) : 23.98p, 24p, 25p, 29.97p, 47.95p 5.8K 17:9 (5792 x 3056) :23.98p, 24p, 25p, 29.97p, 47.95p, 50p, 59.94p 5.4K 16:9 (5452 x 3056) :23.98p, 24p, 25p, 29.97p, 50p, 59.94p	X-OCN XT/ST/LT: 6K 3:2 (6048 x 4032): 23.98p, 24p, 25p, 29.97p, 47.95p, 50p, 59.94p 6K 2.39:1 (6048 x 2534): 23.98p, 24p, 25p, 29.97p, 47.95p, 50p, 59.94p 6K 1.85:1 (6054 x 3272): 23.98p, 24p, 25p, 29.97p, 47.95p, 50p, 59.94p 6K 17:9 (6054 x 3192): 23.98p, 24p, 25p, 29.97p, 47.95p, 50p, 59.94p 5.7K 16:9 (5674 x 3192): 23.98p, 24p, 25p, 29.97p, 50p, 59.94p 4K 6:5 (4096 x 3432): 23.98p, 24p, 25p, 29.97p, 47.95p, 50p, 59.94p 4K 4:3 (4096 x 3024): 23.98p, 24p, 25p, 29.97p, 47.95p, 50p, 59.94p 4K 17:9 (4096 x 2160): 23.98p, 24p, 25p, 29.97p, 47.95p, 50p, 59.94p 4K 2.39:1 (4096 x 1716): 23.98p, 24p, 25p, 29.97p, 47.95p, 50p, 59.94p 3.8K 16:9 (3840 x 2160): 23.98p, 24p, 25p, 29.97p, 50p, 59.94p

MK20467V3OHB22APR

	VENICE 2 with 8.6K image sensor (MPC-3628)	VENICE 2 with 6K image sensor (MPC-3626)
Recording Format (ProRes)	ProRes 4444/ProRes 422 HQ 4K (4096x2160): 23.98p, 24p, 25p, 29.97p, 50p, 59.94p QFHD (3160x2160): 23.98p, 24p, 25p, 29.97p, 50p, 59.94p	
Recording Format (Audio)	LPCM 4ch, 24-bit 48-kHz	
Inputs/Outputs		
DC Input	XLR-type 4 pin (male)	
Battery DC Input	Square-shaped 5 pin connector	
DC Output	12 V: Lemo 2 pin x1 24 V: Fischer 3 pin x2	
SDI Output	BNC x4, (12G, 6G, 3G, 1.5G-SDI)	
HD MONI Output	BNC x1 (3G, 1.5G-SDI)	
HDMI Output	Type A x1	
VF	LEMO 26 pin	
Audio Input	XLR-type 5 pin (female) x1 (LINE/AES/EBU/MIC/MIC+48 V selectable) Internal mic x1	
Timecode Input	BNC x1	
Genlock Input	BNC x1	
AUX	BNC x1 (Timecode Output)	
Remote	8 pin x1	
Lens	12 pin x1	
Lens Mount Hot Shoe	4 pin x2, supporting Cooke /i Intelligent Electronic Lens System and ZEISS eXtended Data	
Network	RJ-45 type x1, 10BASE-T, 100BASE-TX	
External device connector	USB host, type-A x1	
Headphone Output	Stereo mini jack x1	
Speaker Output	Monoral	
Media type	AXS Memory A-Series slot x2 SD card slot x1	

* X-OCN XT is not supported
** CBKZ-3620A/AM/AW is required
*** CBKZ-3620F/FM/FW is required

©2022 Sony Corporation. All rights reserved.
Reproduction in whole or in part without written permission is prohibited.
Features, design, and specifications are subject to change without notice.
The values for mass and dimension are approximate.
"SONY" is a registered trademark of Sony Corporation.
All other trademarks are the property of their respective owners.
Please visit VENICE 2 website or contact your Sony representative for more information.

CineAlta